eBOX560-52R-FL NEW

Fanless Embedded System with Intel® Core™ i5-8365UE/Celeron® 4305UE Processor, HDMI/ DisplayPort++, 2 GbE LAN, 2 COM, 4 USB and 12VDC Power Input

Features

- 8th gen Intel® Core™ and Celeron® processor onboard (Whisky Lake-U)
- One M.2 Key E 2230 for Wi-Fi module
- 260-pin DDR4-2400 SO-DIMM, max. up to 32GB
- 2 GbE LAN and 2 USB 3.1 Gen2
- Supports DisplayPort++ and HDMI for dual independent displays
- Multiple mounting designs: Wall mount, DIN-rail and VESA mount

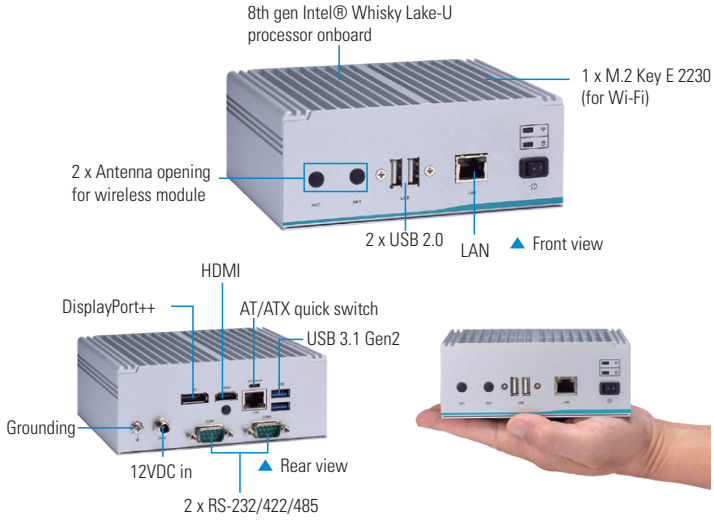

Specifications

Standard Color	Silver
Construction	Aluminum extrusion and heavy-duty steel, IP40
CPU	Intel® Core™ i5-8365UE, 1.6 GHz Intel® Celeron® 4305UE, 2.0 GHz
System Memory	1 x 260-pin DDR4-2400 SO-DIMM, max. up to 32GB
Chipset	SoC integrated
BIOS	AMI UEFI BIOS
System I/O Outlet	2 x RS-232/422/485 2 x 10/100/1000 Mbps Ethernet (Intel® i219-LM, Intel® i211-AT) 2 x USB 2.0 2 x USB 3.1 Gen2 1 x DisplayPort++ 1 x HDMI 1 x ATX power switch 1 x AT/ATX quick switch 1 x Screw type VDC power input connector 2 x Antenna opening
Watchdog Timer	65535 levels, 1 to 65536 sec.
Storage	1 x 2.5" SATA HDD drive bay (max. up 9.5 mm height)
Expansion Interface	1 x M.2 Key E 2230 (for Wi-Fi)
TPM	N/A
System Indicator	1 x Green LED for system power-on 1 x Orange LED for HDD active
Power Input	12 VDC
Operating Temperature	-10°C to +50°C (+14°F to +122°F) with 0.7 m/s air flow (with W.T. SSD/DRAM)
Storage Temperature	-20°C to +80°C (-4°F to +185°F)
Humidity	10% - 90%, non-condensing
Vibration Endurance	IEC 60068-2-64 (with SSD: 3Grms STD, random, 5 to 500 Hz, 1 hr/axis)
Shock Vibration	IEC 60068-2-27 (with SSD: 50G, half sine, 11 ms duration)
Dimensions	141.6 mm (5.57") x 106 mm (4.17") x 55 mm (2.17")
Weight (net/gross)	0.6 kg (1.32 lb)/1.5 kg (3.3 lb)
Certifications	CE, FCC Class A
EOS Support	Win 10 IoT, Linux
Software Support	AMS.AXView

* W.T.: Wide Temperature. All W.T. supported products have to be sorted by Axiomtek.

Packing list

4 x Foot Pad
1 x Screw Pack
1 x HDD bracket
1 x DRAM thermal pad Bracket
2 x DRAM thermal pad

Power Protection

AC Version
OVP (over voltage protection)
OCP (over current protection)
SCP (short circuit protection)

Ordering Information

Optional	
eBOX560-52R-FL-DC-8365UE	Fanless embedded system with Intel® i5-8365UE, HDMI/ DisplayPort++, 2 GbE LAN, 2 COM, 4 USB and 12 VDC
eBOX560-52R-FL-DC-4305UE	Fanless embedded system with Intel® Celeron 4305UE, HDMI/DisplayPort++, 2 GbE LAN, 2 COM, 4 USB and 12 VDC

Optional	
DDDR4 SO-DIMM	4G to 32GB
2.5" SATA HDD	64GB or above
2.5" SATA SSD	100GB or above
8816K560BA0E	DIN-Rail kit
8816K560AA0E	VESA mount kit
8816K560IA0E	Wall mount kit
50966124050E	12V/60W power adapter Power cord

* Specifications and certifications may vary based on different requirements.

Dimensions

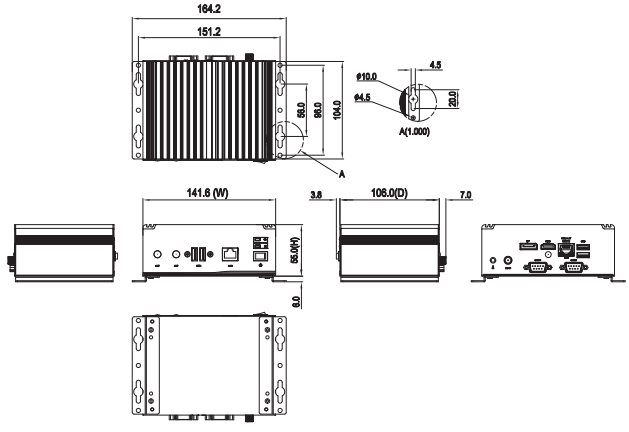

Updated Apr. 22, 2021.
* All specifications and photos are subject to change without notice.

© 2021 Axiomtek Co., Ltd. All rights reserved.